FIGURE 1-1: PIC18F2XK20 (28-PIN) BLOCK DIAGRAM

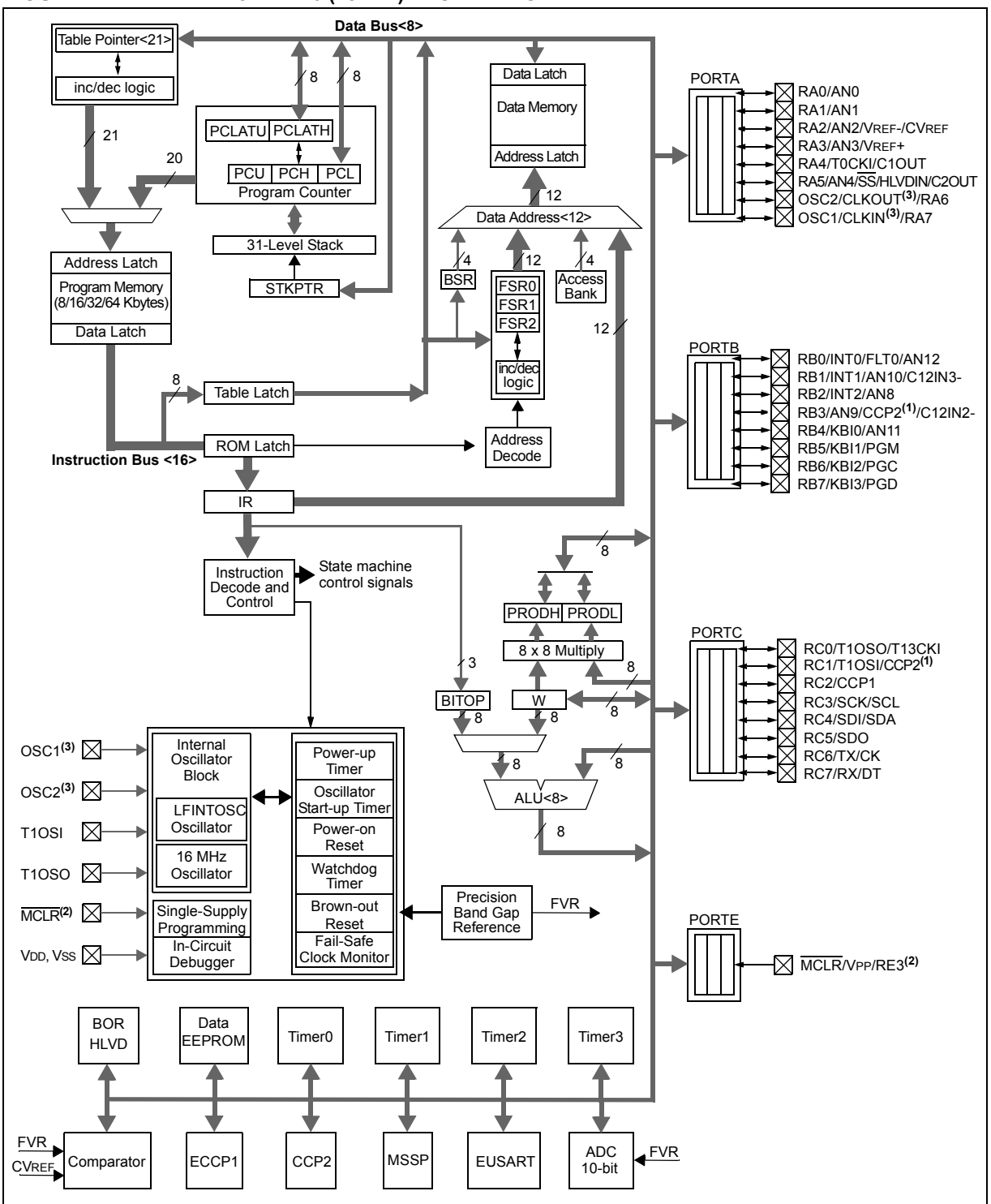

Note 1: CCP2 is multiplexed with RC1 when Configuration bit CCP2MX is set, or RB3 when CCP2MX is not set.

2: RE3 is only available when $\overline{\text{MCLR}}$ functionality is disabled.

3: OSC1/CLKIN and OSC2/CLKOUT are only available in select oscillator modes and when these pins are not being used as digital I/O. Refer to **Section 2.0 "Oscillator Module (With Fail-Safe Clock Monitor)"** for additional information.

© 2010 Microchip Technology Inc.